UNIVERSAL SILENCER
A FLEETGUARD/NELSON COMPANY
P.O. Box 411, Stoughton, Wisconsin 53589
608-873-4272 Fax 608-873-4298

STANDARD URBY-2 1/2 BASEPLATE ASSEMBLY

DATE	6-20-00
SHEET	OF
SCALE	NTS

NO.	REVISION	DRAWN	APP'D
0	P/N WAS 55-225-AS REV. 2	BGL 6-20-00	DO 11-30-00
1	17.00 WAS 19.00. 3.00 WAS 5.00	BGL 2-1-01	DO 2-7-01

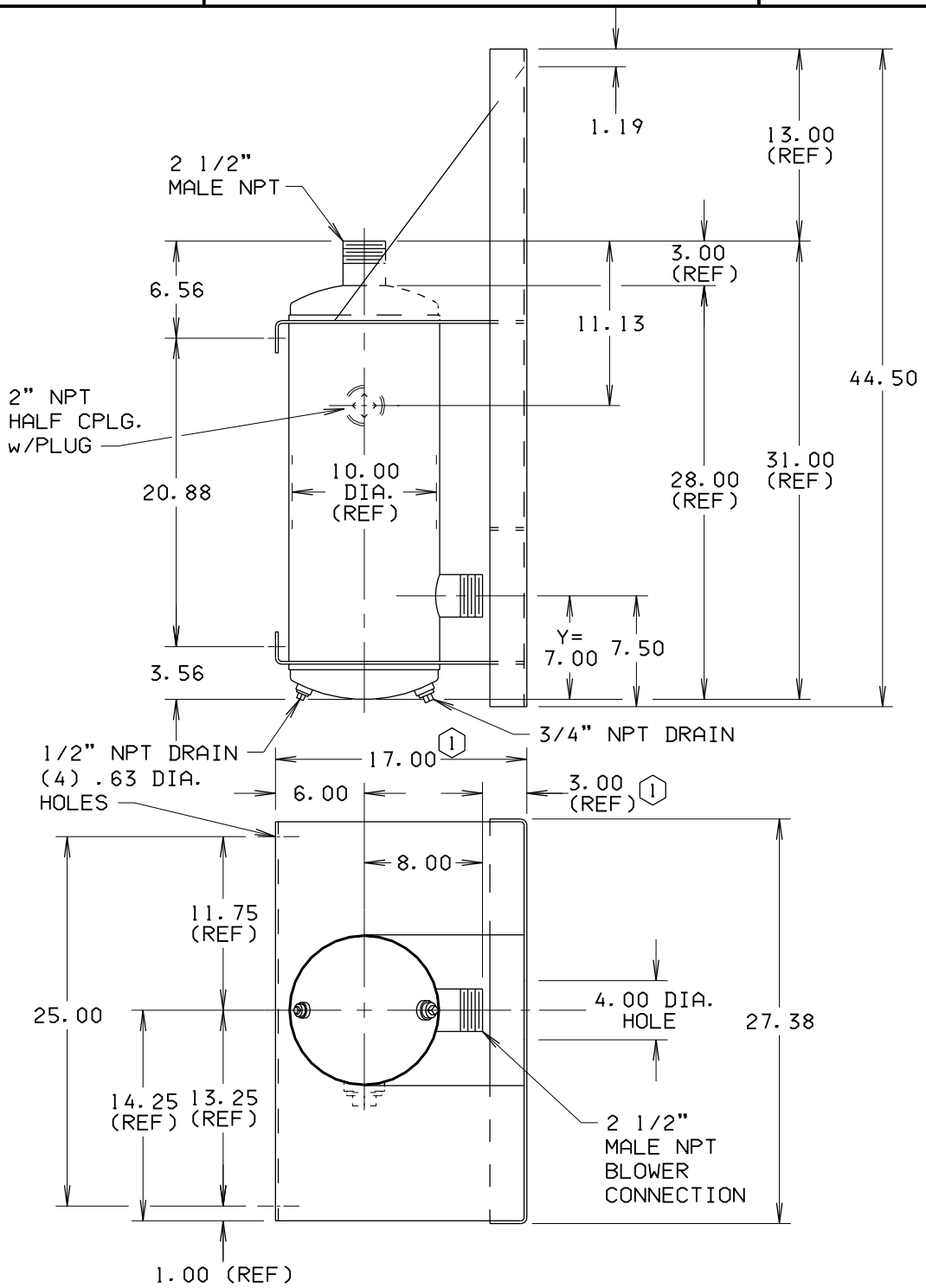

This document contains CONFIDENTIAL and PROPRIETARY Information of Universal Silencer, A Division of Nelson Industries, Inc. Any disclosure or unauthorized use without the express written consent of Universal Silencer is PROHIBITED.

DIMENSIONAL DRAWING NO. 55-225-ABP

MOUNTING LEGS
YES ☐
NO ☐
X DIM= ----
Y DIM= 7.00
X+Y DIM= ----

DIMENSIONS CERTIFIED FOR:
P.O. NO:
U.S. S.O. NO:
BY

APPROX WT 160 LBS	MATERIAL STEEL	DRAWN BGL	DIMENSIONAL DRAWING NO. 55-225-ABP
FINISH 88-0102 SHOP COAT PRIMER		CHECK DO 11-30-00	REV. 1

REV. 1